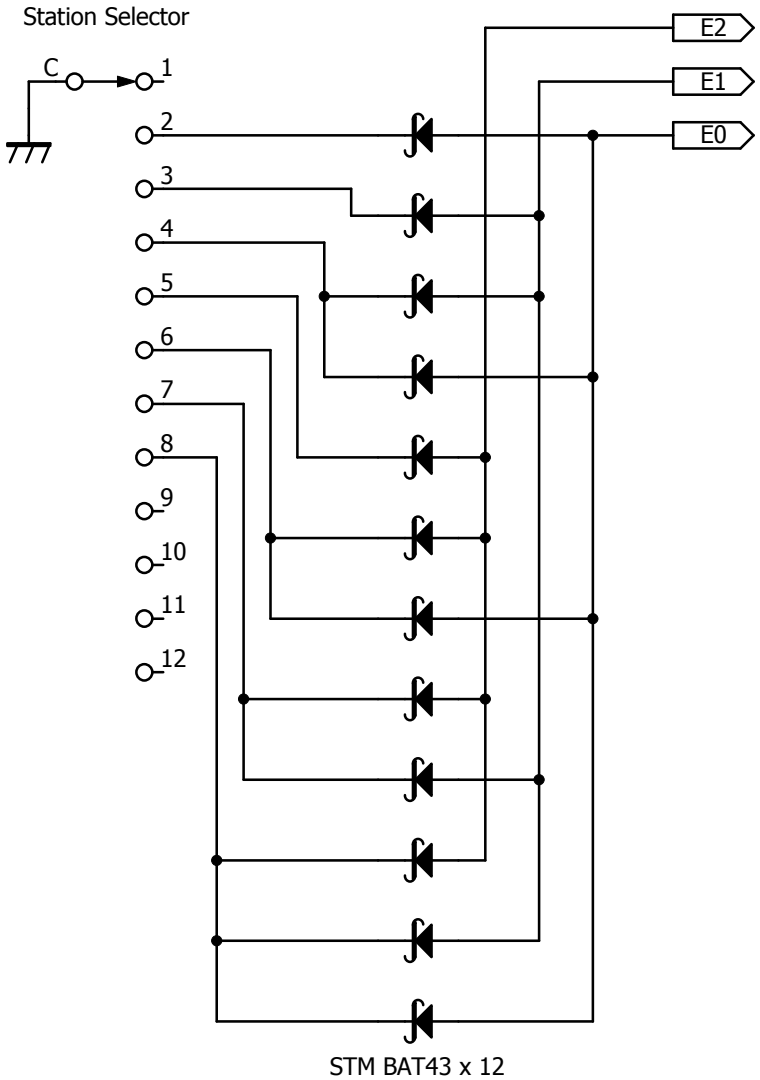

最適化

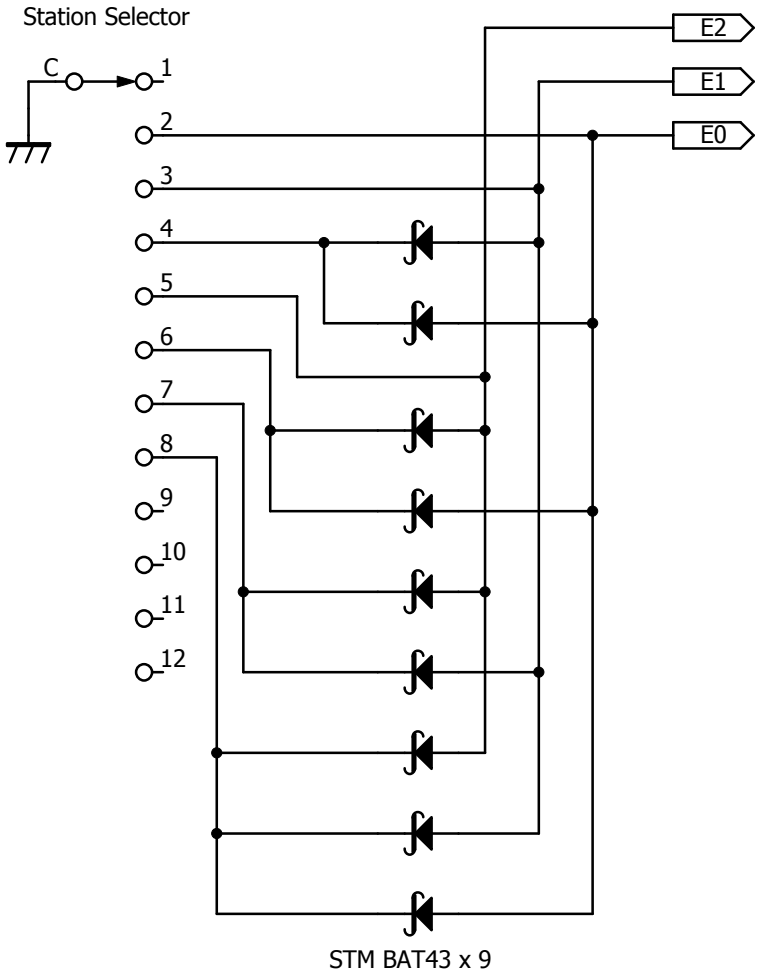

Station Selector	
FPGA tuner	Rev:
Date: 14-Sep-2014	Hiroshi Kitaguchi